IQONIC

PRODUCT CODE: ASSO-IQONIC-M-150



PRODUCT FEATURES

- **150 W total power consumption**
- **20,250 lm luminous flux**
- **135 lm/W luminaire efficacy**
- **IP66 protection rating**
- IP66 ingress protection, IK08 impact resistance
- ENEC-certified driver, optional 10 kV surge protection
- 1-10 V, StepDIM, AstroDIM and DALI dimming
- NEMA and Zhaga socket ready housing

TECHNICAL SPECIFICATIONS

Product Name	IQONIC
Product Code	ASSO-IQONIC-M-150
Colour Temperature	4000 K
CRI	> 70
Number of LEDs	Per project
Luminaire Lumen	20,250 lm
Frequency	50-60 Hz
Operating Voltage	186-264 V
Power Factor	0.95
Power Consumption	150 W
Luminaire Efficacy	135 lm/W
IP Protection	IP66
Impact Resistance	IK08
Protection Class	Class I
Lifetime	> 60.000 hours
Operating Temperature	-30° / +65°
Body Material	Die-cast aluminium
Optic Cover	Extra-clear tempered glass

DIMENSIONS

Housing: M

PRODUCT WEIGHT	4.800 kg	**BOX WEIGHT**	4.970 kg
PRODUCT SIZE	545x240x60 mm	**BOX SIZE**	565x260x110 mm

COLOUR OPTIONS

RAL 9005 RAL 7037 RAL 9006 RAL 9016

* Other project-specific colour options are available.

APPLICATIONS

Şehir içi Yollar · Bina Çevresi · Hava Alanı · Parklar · Benzin İstasyonları · Fabrika

CERTIFICATES

TSE · TSE-HYB · CE · ISO 9001:2015 · ISO 14001 · ISO 10002 · OHSAS 18001 · RoHS · IP66 · IK 08

PRODUCT PHOTOS









DETAILED PARTS LIST

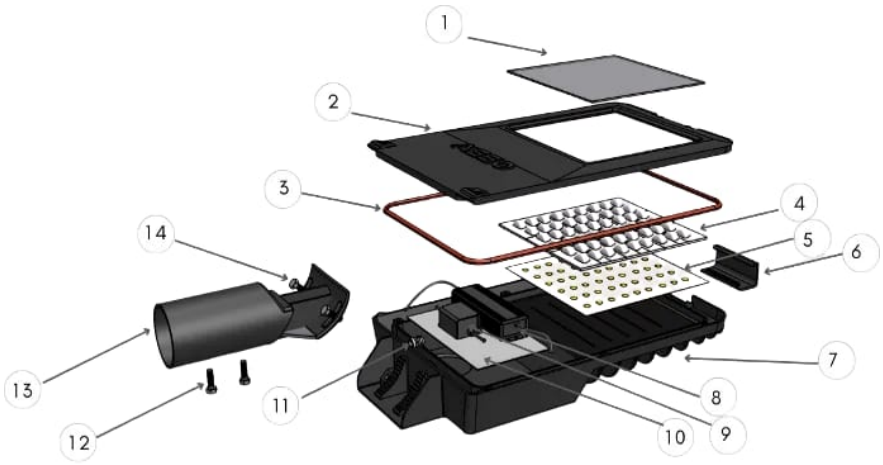

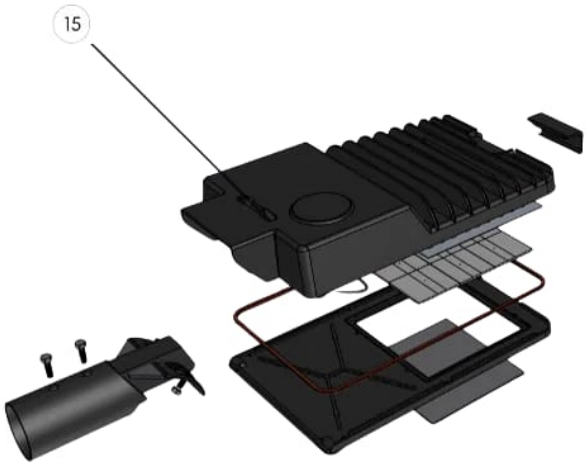

NO	PART NAME
1	Temperli Cam
2	Ön Çerçeve
3	Silikon Conta
4	Optik Lens
5	LED Modül
6	Klips Menteşe
7	Soğutucu Gövde
8	LED Sürücü

NO	PART NAME
9	Parafudr
10	Sürücü Plakası
11	Rakor
12	Direk Bağlantı Vidası
13	Mafsal Konsol
14	Açı Ayar Vidası
15	Su Terazisi

PRODUCT TECHNICAL DRAWINGS

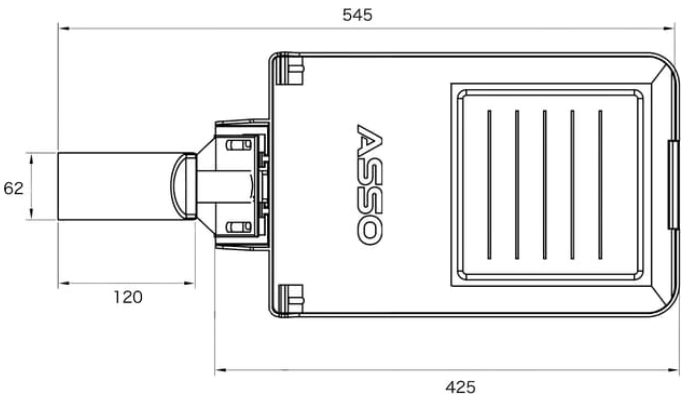

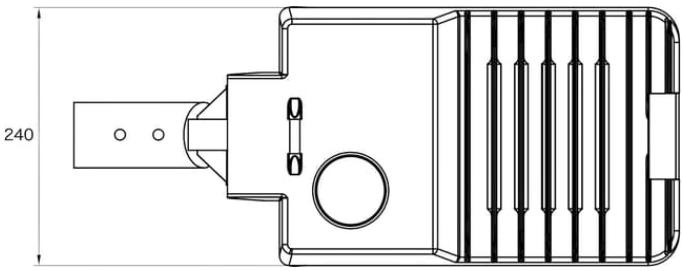

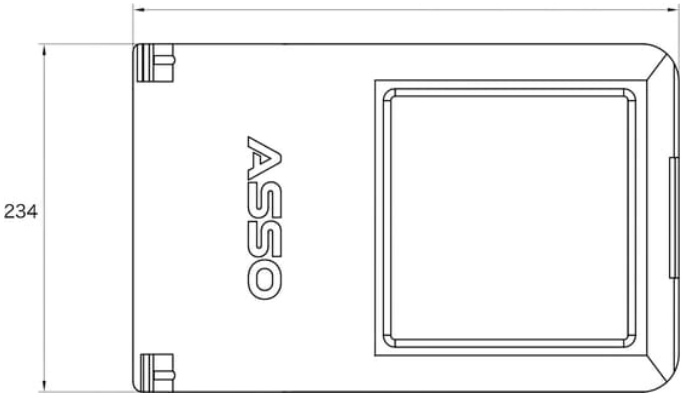

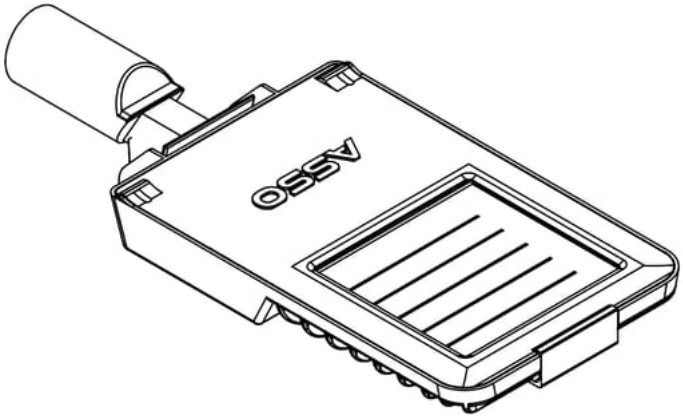

LIGHT INTENSITY DISTRIBUTION CURVES

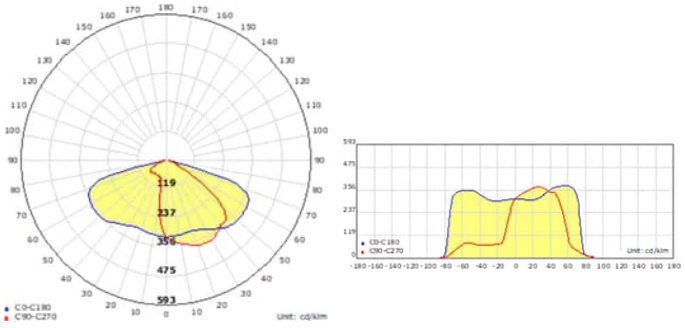

CHROMATICITY DIAGRAM AND SPECTRUM

