# IQONIC

**PRODUCT CODE: IQONIC-M-36S-6H1-75-V1**



## PRODUCT FEATURES

- **77 W total power consumption**
- **11,011 lm luminous flux**
- **143 lm/W luminaire efficacy**
- **IP66 protection rating**
- IP66 ingress protection, IK08 impact resistance
- ENEC-certified driver, optional 10 kV surge protection
- 1-10 V, StepDIM, AstroDIM and DALI dimming
- NEMA and Zhaga socket ready housing

## TECHNICAL SPECIFICATIONS

| | |
|---|---|
| **Product Name** | IQONIC |
| **Product Code** | IQONIC-M-36S-6H1-75-V1 |
| **Colour Temperature** | 4000 K |
| **CRI** | > 70 |
| **Number of LEDs** | 36 |
| **Luminaire Lumen** | 11,011 lm |
| **Frequency** | 50-60 Hz |
| **Operating Voltage** | 186-264 V |
| **Power Factor** | 0.95 |
| **Power Consumption** | 77 W |
| **Luminaire Efficacy** | 143 lm/W |
| **IP Protection** | IP66 |
| **Impact Resistance** | IK08 |
| **Protection Class** | Class I |
| **Lifetime** | > 60.000 hours |
| **Operating Temperature** | -30° / +65° |
| **Body Material** | Die-cast aluminium |
| **Optic Cover** | Extra-clear tempered glass |

## DIMENSIONS

Housing: M

| | | | |
|---|---|---|---|
| **PRODUCT WEIGHT** | 4.800 kg | **BOX WEIGHT** | 4.970 kg |
| **PRODUCT SIZE** | 545x240x60 mm | **BOX SIZE** | 565x260x110 mm |

## COLOUR OPTIONS

RAL 9005 RAL 7037 RAL 9006 RAL 9016

* Other project-specific colour options are available.

## APPLICATIONS

Şehir içi Yollar · Bina Çevresi · Hava Alanı · Parklar · Benzin İstasyonları · Fabrika

## CERTIFICATES

TEDAŞ APPROVED

## PRODUCT PHOTOS











## DETAILED PARTS LIST

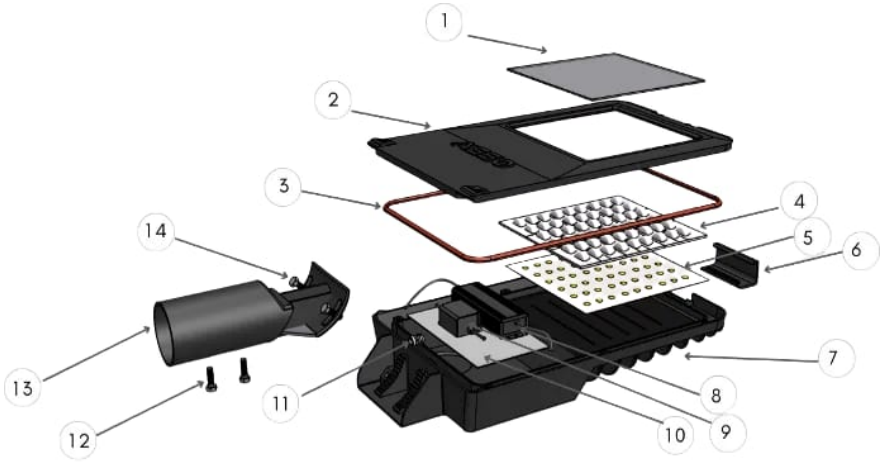


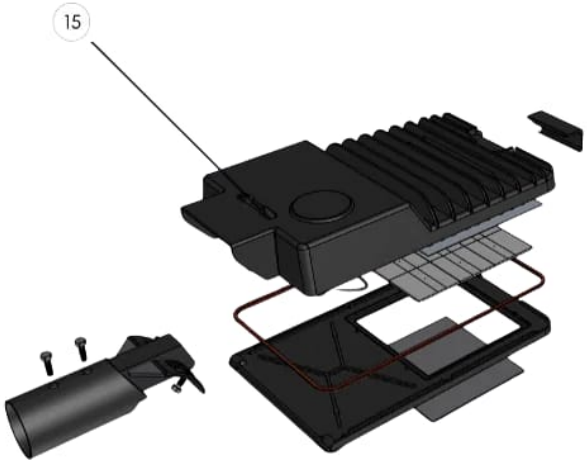


| NO | PART NAME |
|---|---|
| 1 | Temperli Cam |
| 2 | Ön Çerçeve |
| 3 | Silikon Conta |
| 4 | Optik Lens |
| 5 | LED Modül |
| 6 | Klips Menteşe |
| 7 | Soğutucu Gövde |
| 8 | LED Sürücü |

| NO | PART NAME |
|---|---|
| 9 | Parafudr |
| 10 | Sürücü Plakası |
| 11 | Rakor |
| 12 | Direk Bağlantı Vidası |
| 13 | Mafsal Konsol |
| 14 | Açı Ayar Vidası |
| 15 | Su Terazisi |

## PRODUCT TECHNICAL DRAWINGS

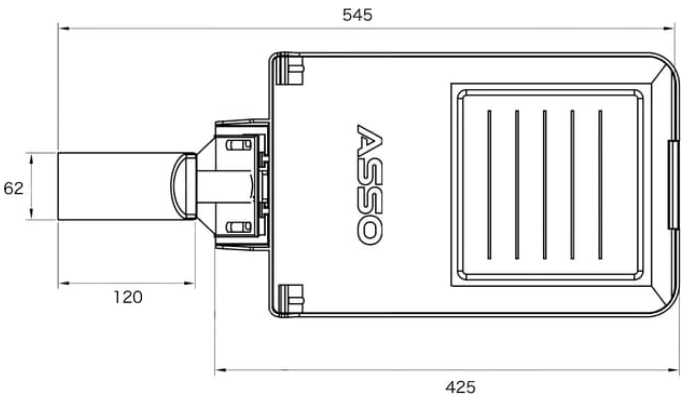


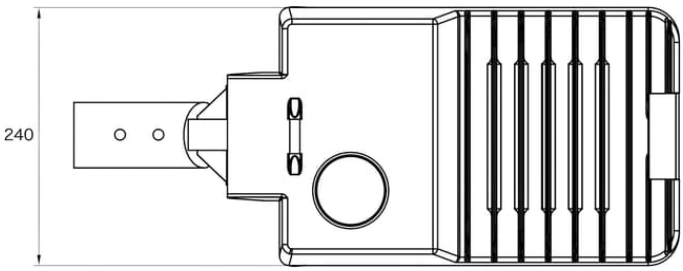


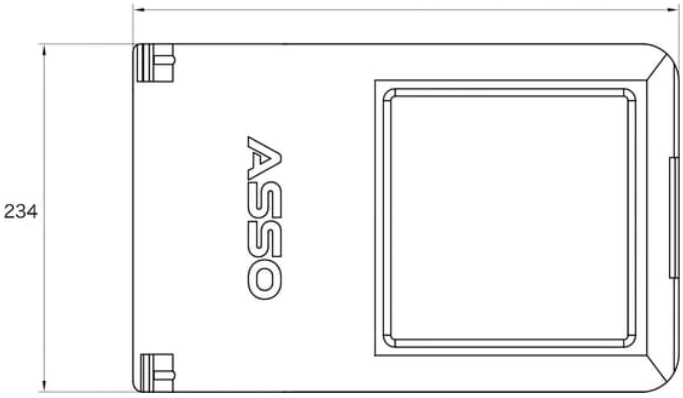


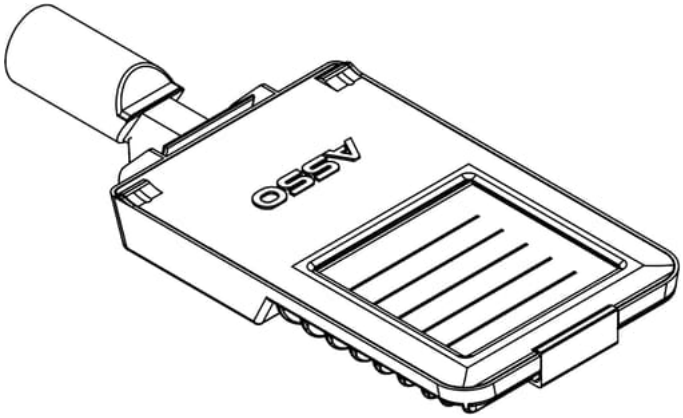


## LIGHT INTENSITY DISTRIBUTION CURVES

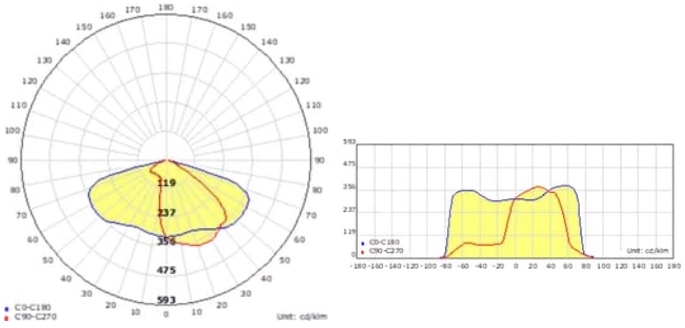


## CHROMATICITY DIAGRAM AND SPECTRUM

